Pharmaceutics | Chapter-4 | Unit-3

Mixing

Mixing is defined as a process that tends to result in a randomization of dissimilar particles within a system. Mixing refers to the random distribution into are through one another of two or more separate phases. Some of the mixing operations in the dispensing practice are spatulation, trituration, tumbling, geometric dilution etc.

Agitation—Agitation refers to the induced motion of a material in a specified way, usually in a circulatory pattern inside a container.

The term mix means to put together in one mass or assemblage with more or less through diffusion of the constituent elements among one another.

The term blending means to mix smoothly and inseparably together. During blending minimum energy is imported to the bed

Factor influencing mixing process—

1. Nature of surface.
2. Density of the particles.
3. Particle size and shape.
4. Particle charge.
5. Proportion of materials.

Mechanism of mixing in Solids—

1. **Convective mixing**—It is achieved by the inversion of the powder bed using blades or paddles or screw element. A large mass of material moves from one part to another. Convective mixing is referred to as macro mixing.
2. **Shear mixing—**In this type, the forces of attraction are broken down so that each particle moves on its own between regions of different composition and parallel to their surface.

3. **Diffusive mixing—**It involves the random motion of particles within the powder bed, there by particles change their position relative to one another. Diffusive mixing is referred to as micro mixing.

In Solid-solid mixing operation four steps are involve—

1. Expansion of the bed of solids.
2. Application of three dimensional shear forces to the powders.
3. Mix long enough to permit true randomization of particles.
4. Maintain randomization (no segregation after mixing).

Equipment used for solid Mixing— V cone blender, Double cone blender, Ribbon blender, sigma blade mixer etc.

Mixing Of liquids.

Liquid-liquid mixing is considered as a simple operation compared to that of solid-liquid mixing. It involves the formulation of a homogeneous system. According to theories of solutions, liquid mixtures are classified as follows—

1. **Miscible liquids**—Miscible in all proportion.
   Example- Ethyl alcohol and water.
2. **Partially miscible liquids—**Miscible in one another at one particular proportion. Example- P-cresol and water.
3. **Immiscible liquids—**these are not miscible.
   Example- vegetable oils and water.

Equipment used for liquid mixing— Propellers, turbines, Airjet mixer.

Mixing of Immiscible liquids.

- Mixing of immiscible liquids is carried in pharmacy mainly in the manufacturing of emulsions. The equipment used for preparation of an emulsion is known as emulsifier. Generally a fine emulsion can be obtained and therefore, equipment is also known as homogenizer.

- Sometimes, the above equipment directly gives fine emulsion. Otherwise, coarse emulsion is subjected to homogenization in the second stage to get fine emulsion by using one of the following- Silverson emulsifier, colloid mill, rapisonic homogenizer.

Mixing of semisolids.

Semisolid dosages forms include ointments, pastes, creams, jellies etc. while mixing such dosages forms, the material must be brought to the agitator or the agitator must move the material throughout the mixer.

The mixing action includes combination of low speed shear, smearing, wiping, folding, stretching and compressing. Mixing equipment are also used for preparing tooth paste, pill mass and wet mass for granulation.

Some semisolids exhibit dilatants property that is viscosity increase with increase in shear rates. Therefore, mixing must be done at lower speeds. The speed must be changed accordingly to thixotropic, plastic and Pseudo plastic materials.

Equipment used for mixing of semisolid— Sigma mixer and planetary mixer (Solid-solid mixer), triple roller mill, colloidal mill.

Double cone blender.

Principle—It is an efficient design for mixing of powder of different densities. It is usually charged and discharged through the same port. These are used mostly for small amounts of powders.

The rate of rotation should be optimum depending on the size and shape of the tumbler, nature of materials to be mixed. Commonly the range is 30 to 100 R.P.M.

Construction—

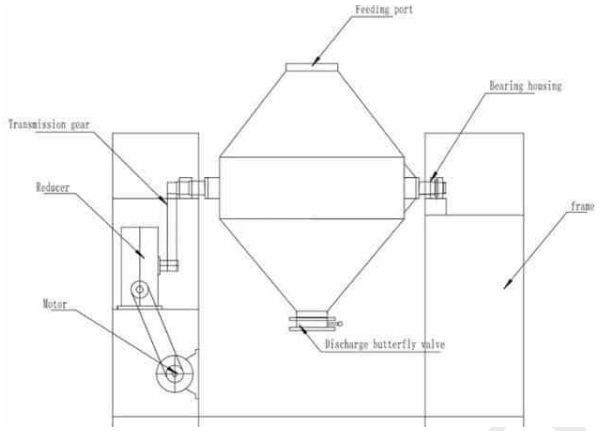

- The conical shape at both the end enable uniform mixing and easy discharge.
- The cone is statically balanced which protects the gear box and motor from any excessive load.
- Powder is loaded into the cone through a wide opening and discharged through a butterfly or a slide valve.
- Depending upon the characteristic of the products, paddle type baffles can be provided.

Working—The material is loaded approximately 50% to 60% of its total volume. As the blender rotates, the material undergoes tumbling motion. This motion dividing and recombination continuously yields ordered mixing by mechanical means. Blender speed is the key for mixing efficiency. At high speed, more dusting or segregation of fines is possible, while at low speeds, not enough shears may be applied.

Uses/Applications—It is an efficient and versatile machine for mixing of dry powders and granules homogeneously.

Advantage—

- It is suitable for fragile granules because of minimum attrition.
- Easy to clean, load and unload.
- They handle large capacities.
- This equipment requires minimum maintenance.

Disadvantage—

- Need high head space for installation.
- It is not suitable for fine particulate system or ingredients of large differences in the particle size distribution because not enough shears is applied.

Turbine Mixer.

Principle—A turbine mixer is a mechanical device that is used in mixing different types of liquids. The turbine mixer works mainly on the principle of shearing action.

Construction—

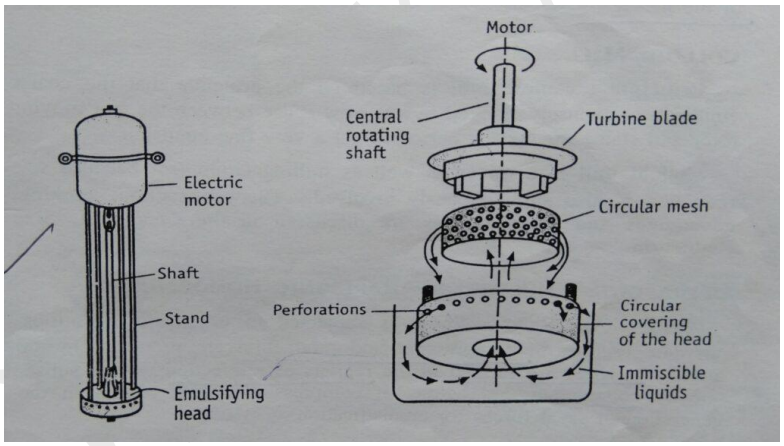

- A turbine consists of a circular disc to which a number of short blades are attached. The diameter of the turbine ranges from 30% to 50% of the diameter of the vessel.
- It rotates at a lower speed than propeller (50-200 R.P.M).
- The blades may be straight, curved, pitched or vertical.

Working—A flat bladed turbine produces radial and tangential flow, but as speed increase radial flow dominates. A pitched blade turbine produces axial flow.

Near the impeller, the zone of rapid currents high turbulence and intense shear is observed. The shear produced by turbines can be further enhanced using a diffuser ring.

A diffuser ring is a stationary perforated or slotted ring, which surrounds the turbine. It increase shear forces, the liquid passes through the perforations reducing rotational swirling and vortexing.

Uses/Applications—Turbines are effective for high viscous solutions with a very wide range of viscosities up to 700 Pascal/seconds (syrups, liquid paraffin, glycerin etc). They can handle slurries with 60% solids. Turbines are suitable are suitable for liquids of large volume and high viscosity, if the tank is baffled.

Advantage—Turbine gives greater shearing forces than propellers, through the pumping rate is less. Therefore, turbines are suitable for emulsification.

Disadvantage—Turbine has less pumping rate.

Silverson Mixer.

Principle—Silverson mixer produces intense shearing forces and turbulence by the use of high speed rotors. This turbulence causes the liquids to pass through fine interstices formed by closely placed perforated metal sheets. Circulation of material take place through the head by the suction produced in the inlet at the bottom of the head. Circulation of the material ensures rapid breakdown of the dispersed liquid into smaller globules.

Construction—

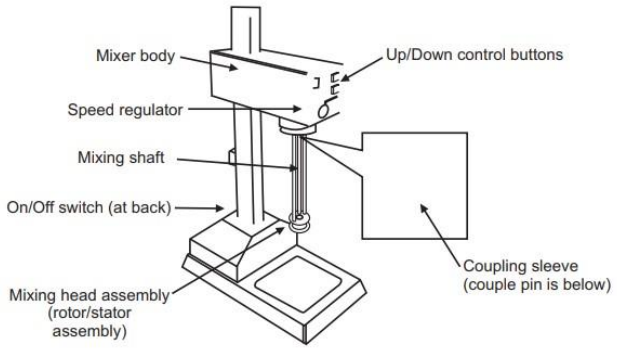

- It consists of long supporting columns connected to a motor which give support to the head. The central portions contain a shaft, one end of which is connected to the motor and the other end is connected to the head.

- The head carries turbine blades. The blades are surrounded by a mesh, which is further enclosed by a cover having openings.

Working—

- The emulsifier head is placed in the vessels containing immiscible liquids in such a way that it should get completely dipped in the liquid.
- When the motor is started, the central rotating shaft rotates the head. This in turn rotates turbine blades at a very high speed.
- This creates a pressure difference; as a result liquids are sucked into the head from the center of the base and subjected to intense mixing action.
- The intake and expulsion of the mixture set up a pattern of circulation to ensure rapid breakdown of the bigger globules into smaller globules.

Uses/Applications—Silverson mixer is used for the preparation of emulsions and creams of fine particle size.

Advantage—Silverson mixer is available for thousand liter of mixing.

Disadvantage—Occasional there is a chance of clogging of pores of the mesh.

Triple Roller Mill.

Principle— The differential speed and narrow space between the rollers develop high shear over the materials. This shear causes crushing of aggregates particles and also distributes the drug uniformly throughout the semisolid base.

Construction—

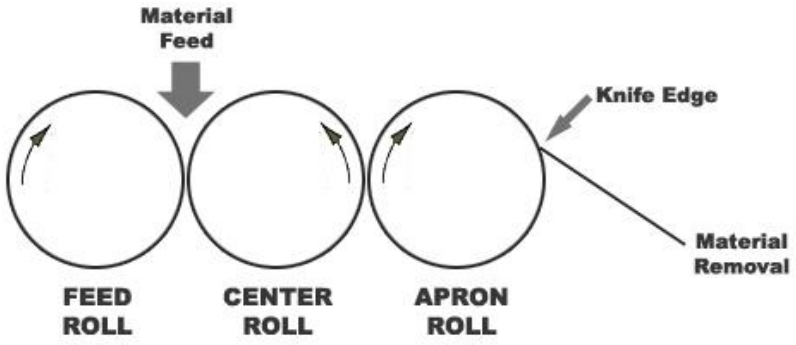

- It consists of three parallel rollers of equal diameters. These are made up of hard abrasion resistant material, normally stainless steel.
- The pressure and gap between the rollers are independently adjustable. A hopper is arranged between the first two rollers. A scrapper is attached to the last roller.

Working—

- The rollers are rotted at different speeds. In practice, the first roller (receiving roller) rotates at a slower speed compared to the second roller. Similarly second roller speed is less than that of third roller (discharged roller).
- The feed is passed through the gap between the first and second roller. The aggregates and particles are crushed and then abraded by the rubbing action of the roller, which is developed due to different speed of rotation.

- A film of appreciable thickness of the feed is produce. The material passes from slow rotating to fast rotating roller.
- Between second and third roller, the gap is small and produces a thinner film of feed. The speed of the third roller is increased to compensate the reduction of cross-sectional area. In the thinning film, more crushing and more abrasion are developed.
- Finally the scrapper removes the material completely from the last roller which can be collected immediately into the receiver or transported through a suitable conveyor.

Uses/Applications—It is uses for production of fine or thinner film, on by large particle feed.

Advantage— Triple roller mill is suitable for continuous process extremely uniform dispersion obtained.

Disadvantage—Roller may cause the abrasion and speed maintain is key tasks.